McGuire Manufacturing Co., Inc.
60 Grandview Court
Cheshire, Connecticut 06410
(203) 699-1801 Fax (203) 699-1813
customerservice@mcguiremfg.com mcguiremfg.com

PRODUCT SPECIFICATION

Part No.

LFH175

Sweat Lavatory Supply

Job Name: **Submittal Number:**

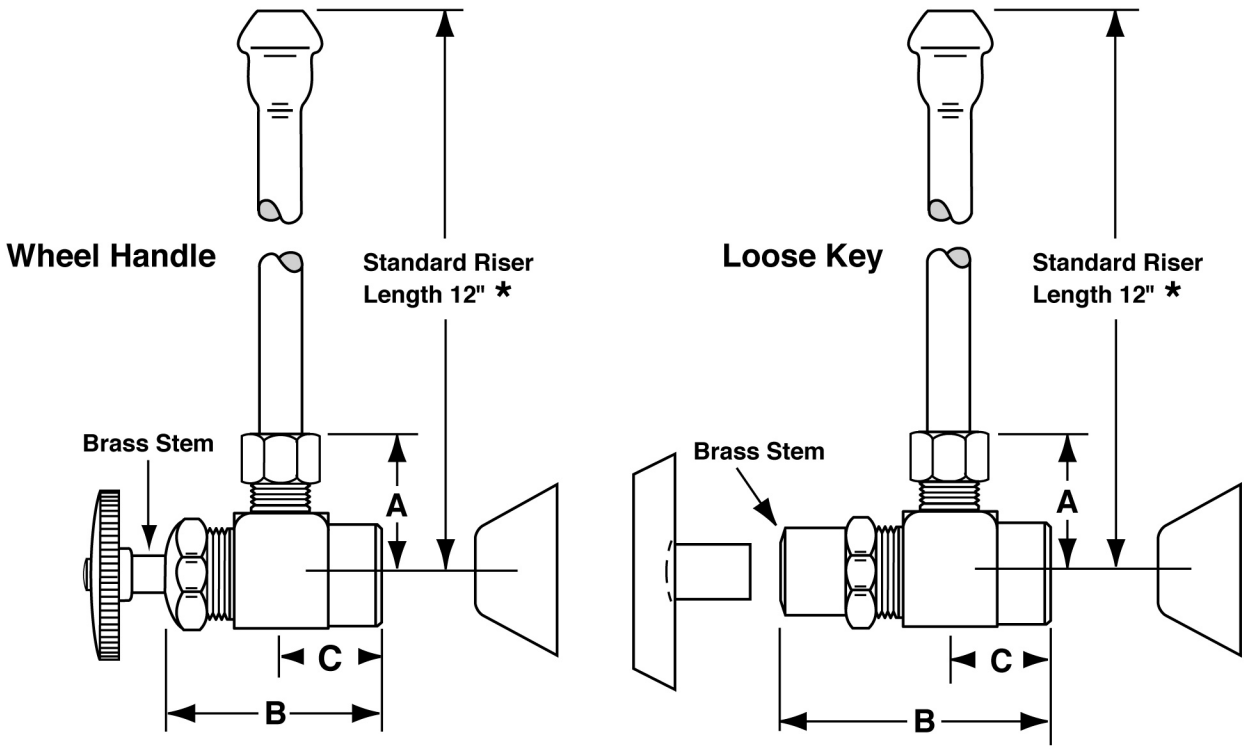

NO.	DESCRIPTION	ROUGHING MEASUREMENTS		
		A	B	C
LFH175	1/2" Sweat x 3/8" O.D.	1-3/8"	2"	1"

ASME A112.18.1

LK designates *Loose Key*

* See options and accessories section for details on product variations.

Specifications:

Supply kit shall include lead free chrome plated heavy pattern supply stop valves with full turn brass stem, no plastic, (12, 15, 20) inch chrome plated risers and (shallow, deep, bell) (steel, brass) or (forged brass with set screw) flange. Inlet shall be 1/2 inch sweat. Outlet shall be 3/8 inch compression. Supply kit shall be McGuire _____. Supply shall be certified by recognized authority and bear manufacturer and testing mark.

WARNING:

This product can expose you to chemicals including lead, which is known to the State of California to cause cancer, and birth defects or other reproductive harm. For more information go to www.P65Warnings.ca.gov.

© 2023 McGuire Manufacturing Co., Inc. All rights reserved / SANIGUARD / www.mcguiremfg.com