McGuire Manufacturing Co., Inc.
60 Grandview Court
P.O. Box 746 • Cheshire, CT 06410
203-699-1801 • Fax: 203-699-1813
www.mcguiremfg.com

PRODUCT SPECIFICATION

Part No.

151SAN

Brass Basket Strainer

Job Name: | **Submittal Number:**

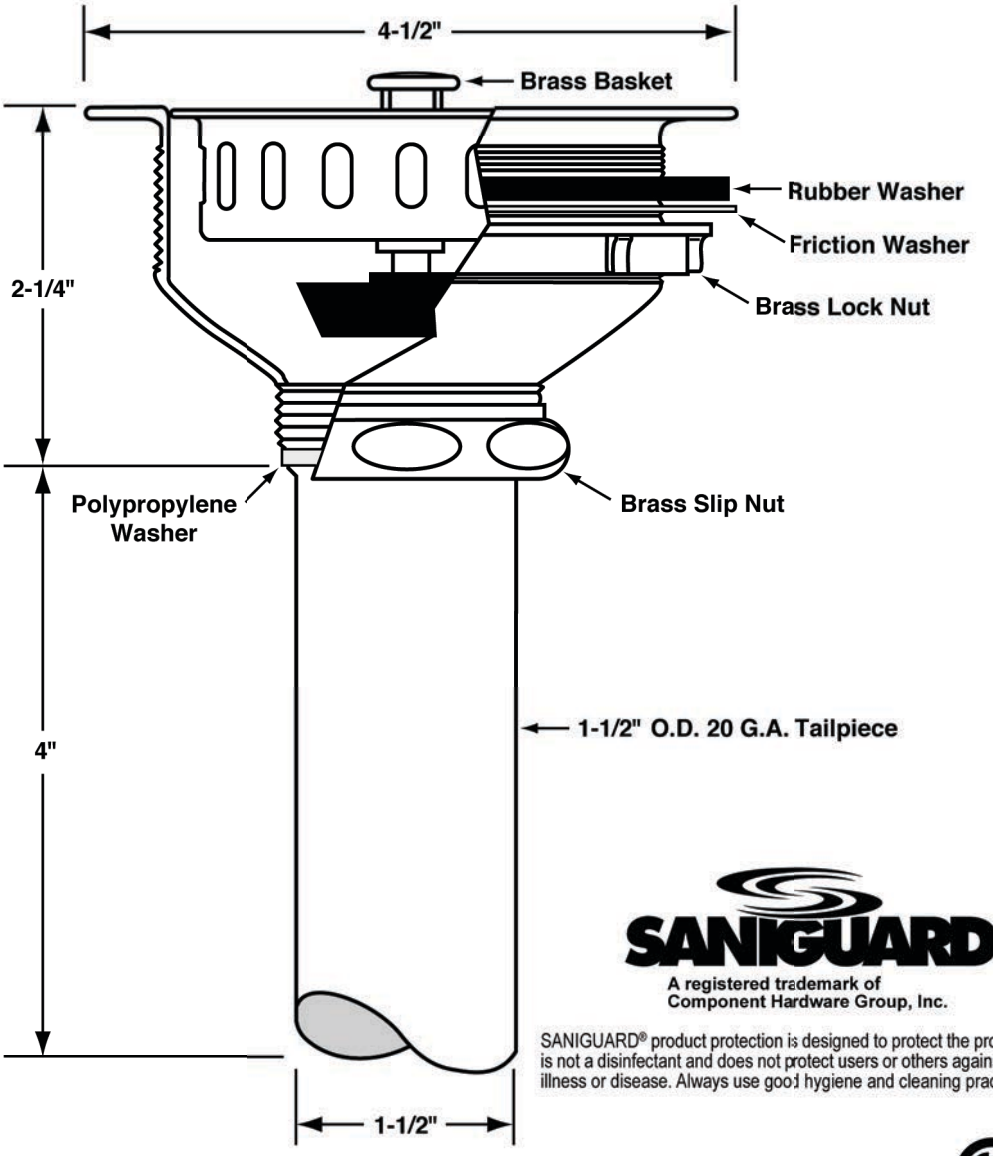

SANIGUARD®
A registered trademark of Component Hardware Group, Inc.

SANIGUARD® product protection is designed to protect the product itself. It is not a disinfectant and does not protect users or others against food-borne illness or disease. Always use good hygiene and cleaning practices.

See options and accessories section for details on product variations. 151 is ASME A112.18.2/CSA B125.2

Specifications:

Heavy duty forged cast brass basket strainer with 1-1/2" x 4" seamless brass tailpiece, die cast slip and lock nuts. Basket strainer shall be in compliance with CSA or other recognized testing authority and bear both manufacturer and testing mark. Fits sink thickness up to 2-3/8". All metal parts shall be treated inside and outside with SANIGUARD® antimicrobial compound.

WARNING:

This product can expose you to chemicals including lead, which is known to the State of California to cause cancer, and birth defects or other reproductive harm. For more information go to www.P65Warnings.ca.gov.

© 2019 McGuire Manufacturing Co., Inc. All rights reserved / SANIGUARD / www.mcguiremfg.com