McGuire Manufacturing Co., Inc.
60 Grandview Court
Cheshire, Connecticut 06410
(203) 699-1801 Fax (203) 699-1813
customerservice@mcguiremfg.com mcguiremfg.com

PRODUCT SPECIFICATION

Part No.

151CNSS316

Type 316 Stainless Steel Conical Strainer

Job Name:

Submittal Number:

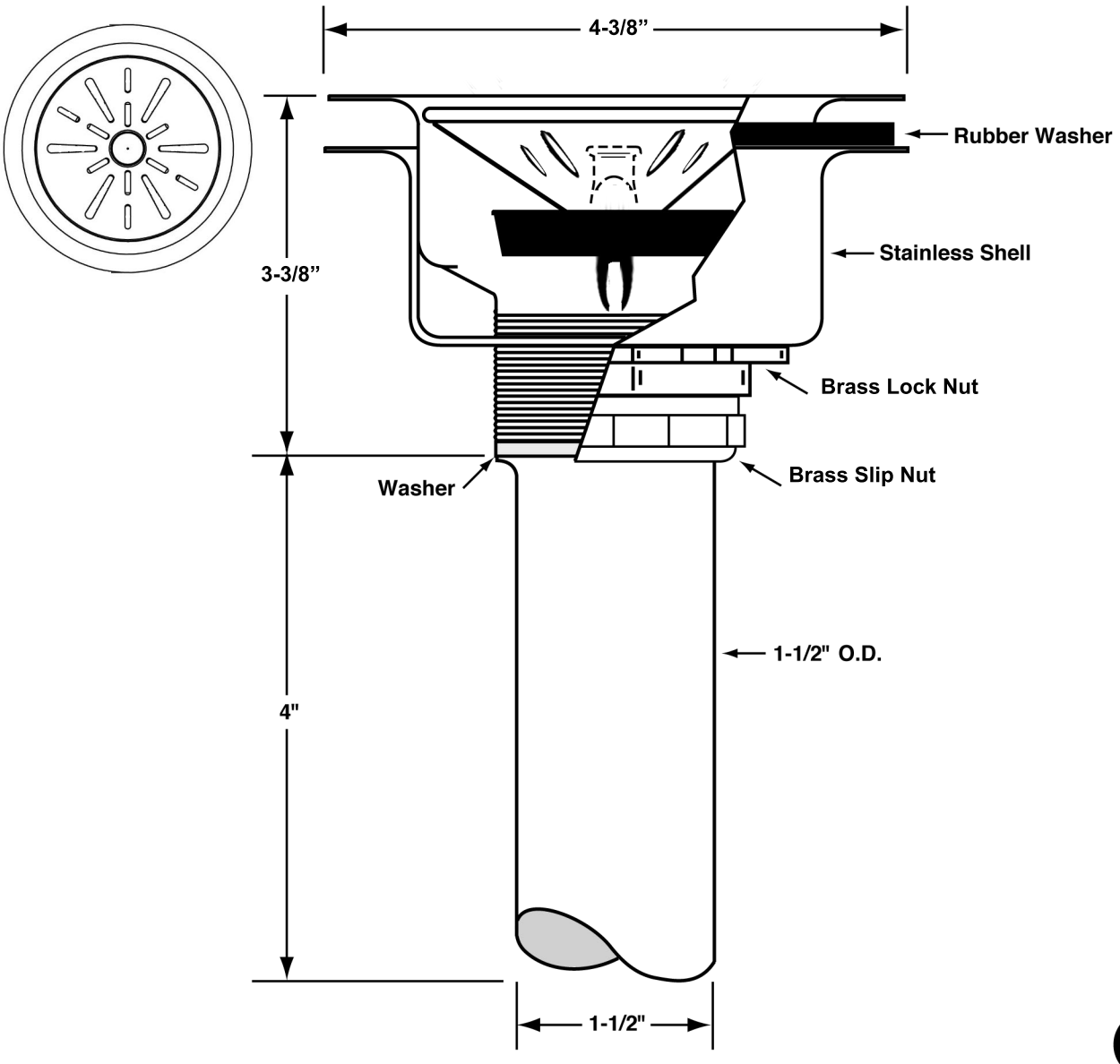

ASME A112.18.2/CSA B125.2

Specifications:

Heavy duty Type 316 stainless steel conical basket strainer with stainless steel tailpiece. Furnished with 1-1/2" x 1 -1/2" cast brass slip nut and 1-1/2" rough brass lock nut. Basket strainer shall be in compliance with CSA and bear both manufacturer and testing mark.

WARNING:

This product can expose you to chemicals including lead, which is known to the State of California to cause cancer, and birth defects or other reproductive harm. For more information go to www.P65Warnings.ca.gov.

© 2019 McGuire Manufacturing Co., Inc. All rights reserved / III Strainers and P.O. Plugs / www.mcguiremfg.com